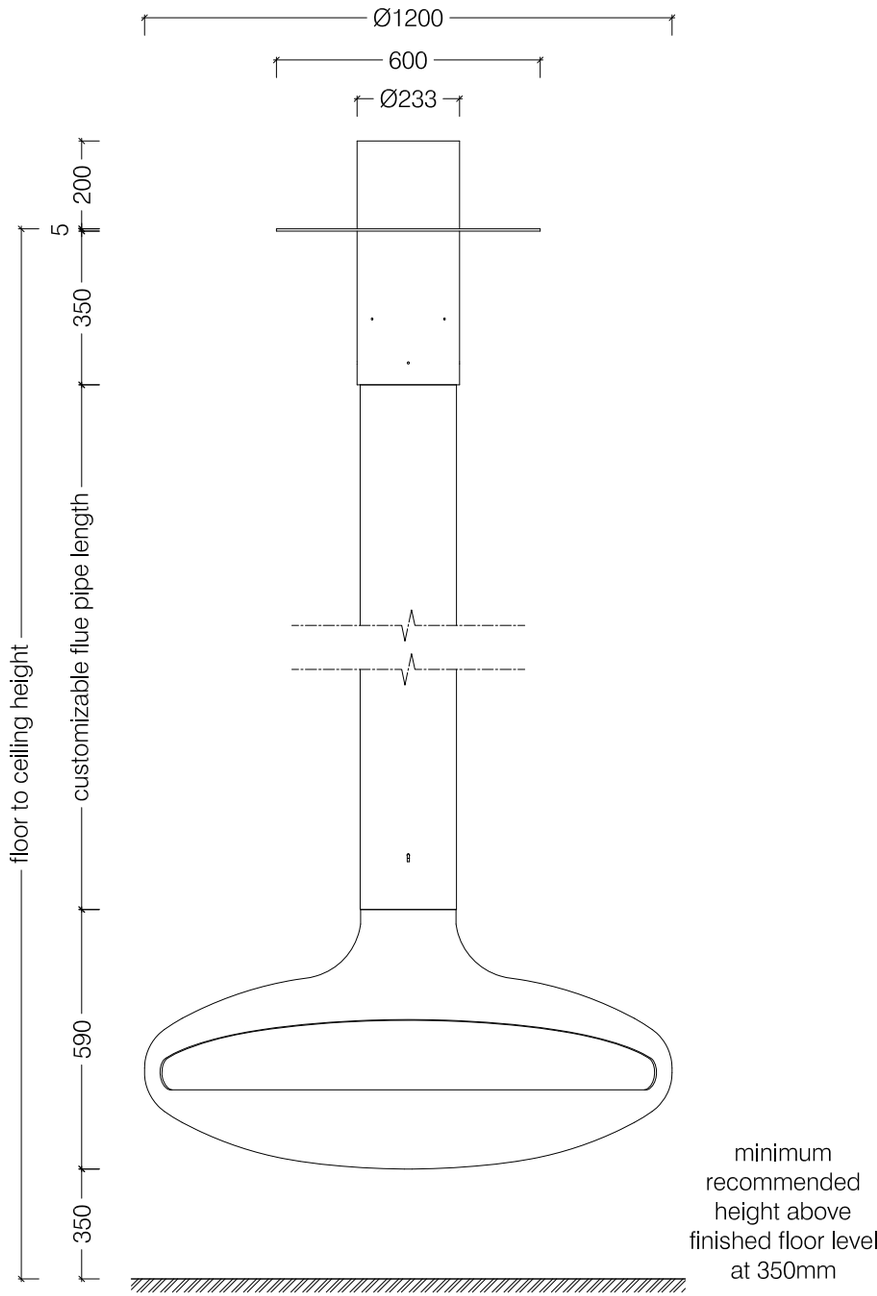
Ø1200
600
Ø233
200
5
350
customizable flue pipe length
floor to ceiling height
590
350
minimum
recommended
height above
finished floor level
at 350mm

Front View

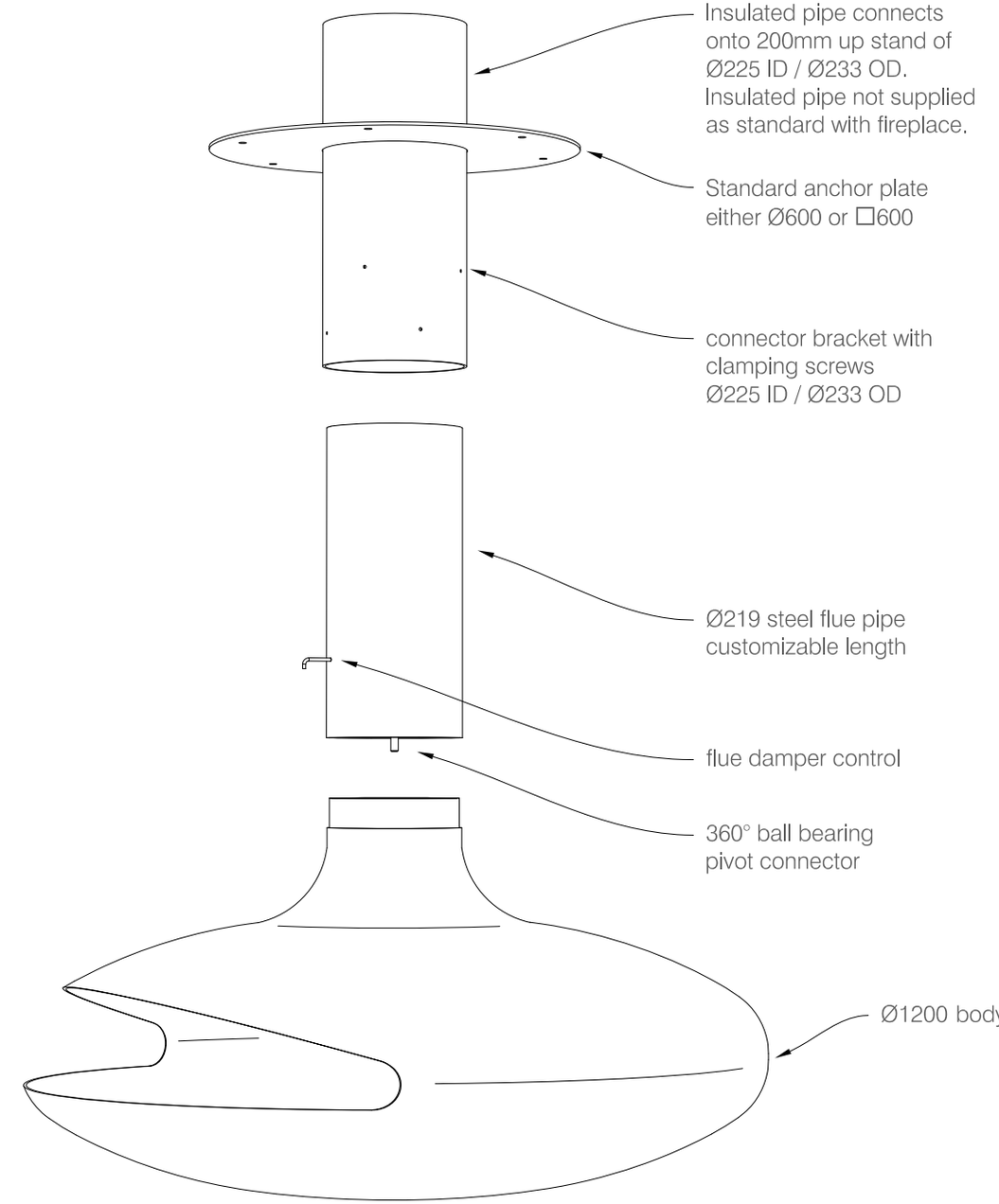
Insulated pipe connects
onto 200mm up stand of
Ø225 ID / Ø233 OD.
Insulated pipe not supplied
as standard with fireplace.
Standard anchor plate
either Ø600 or ☐600
connector bracket with
clamping screws
Ø225 ID / Ø233 OD
Ø219 steel flue pipe
customizable length
flue damper control
360° ball bearing
pivot connector
Ø1200 body